VIREO

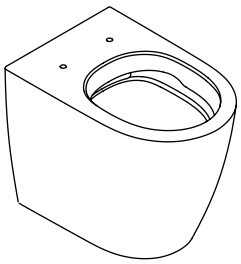

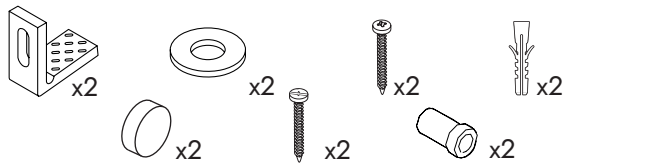

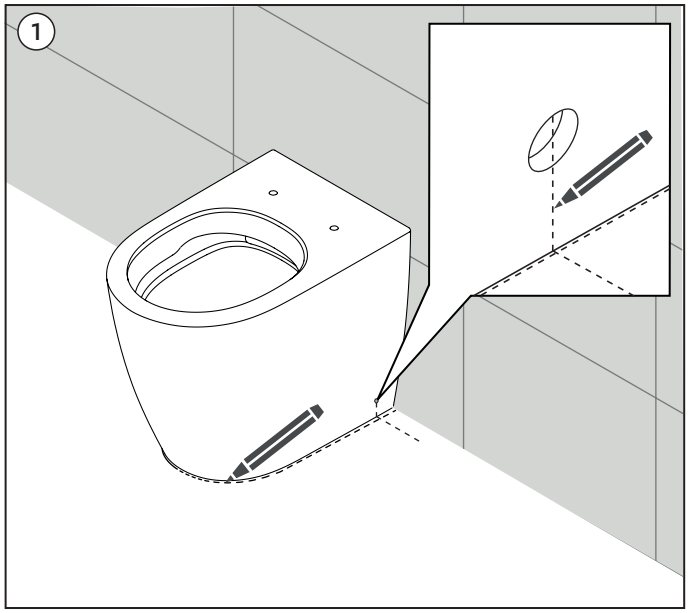

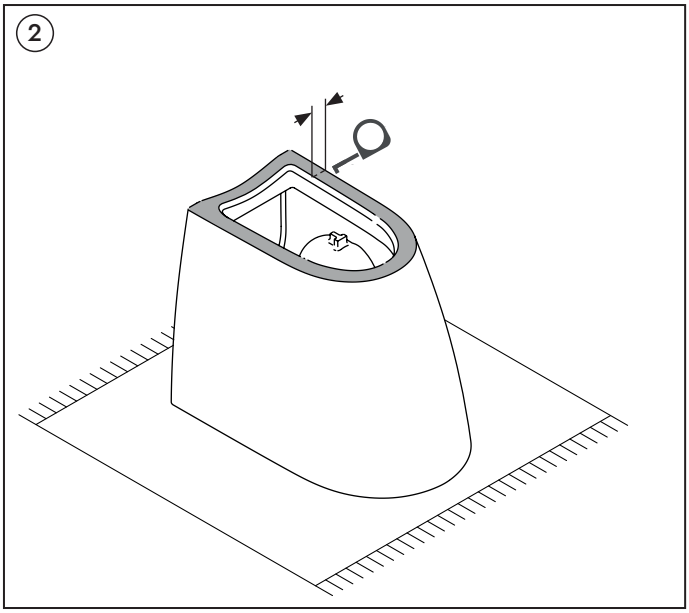

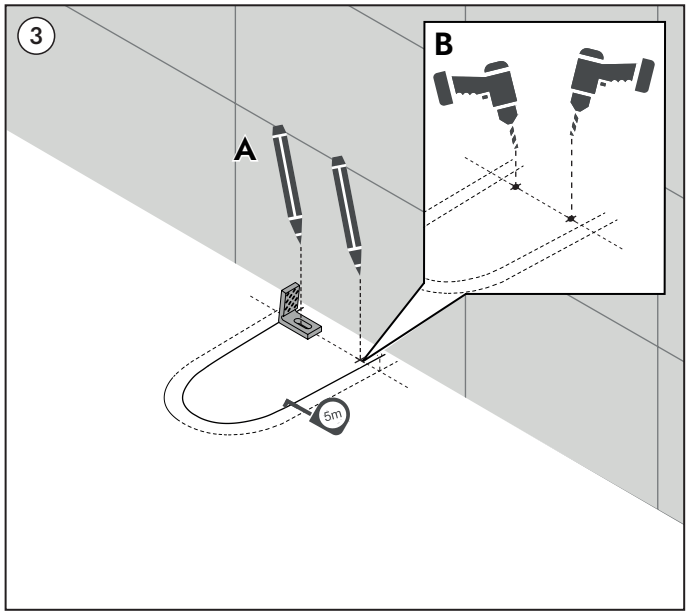

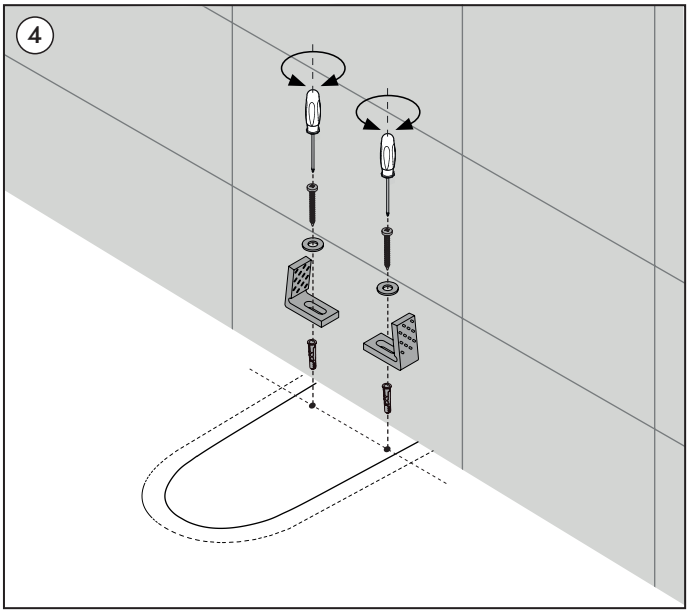

NEXTREND - GMBH | Weiherstraße 1, 65439 Flörsheim a. M., GERMANY
Fon: +49(0)6145–598830 | Fax: +49(0)6145–5988339
support@bernstein-badshop.de | www.bernstein-badshop.de

We reserve the right to make technical improvments and design modifications to the products illustrated.

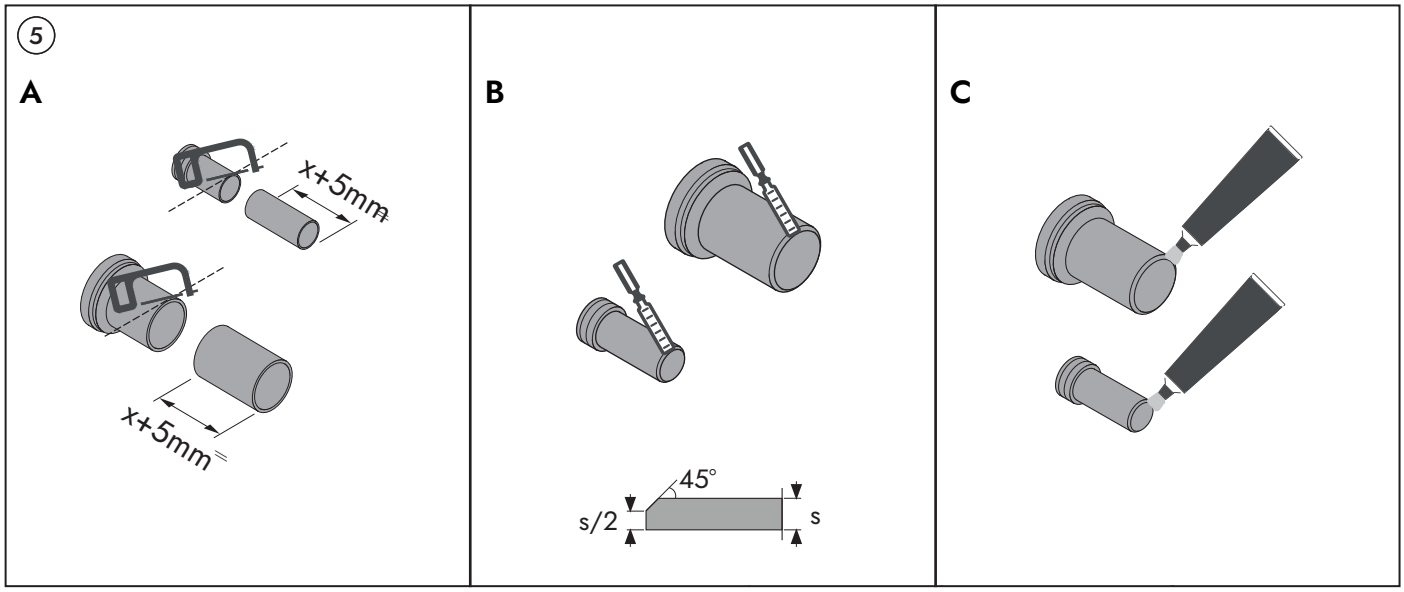

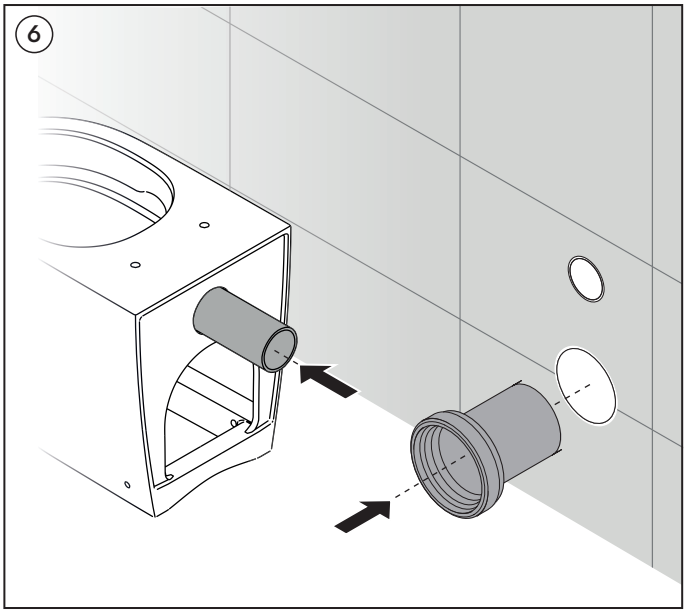

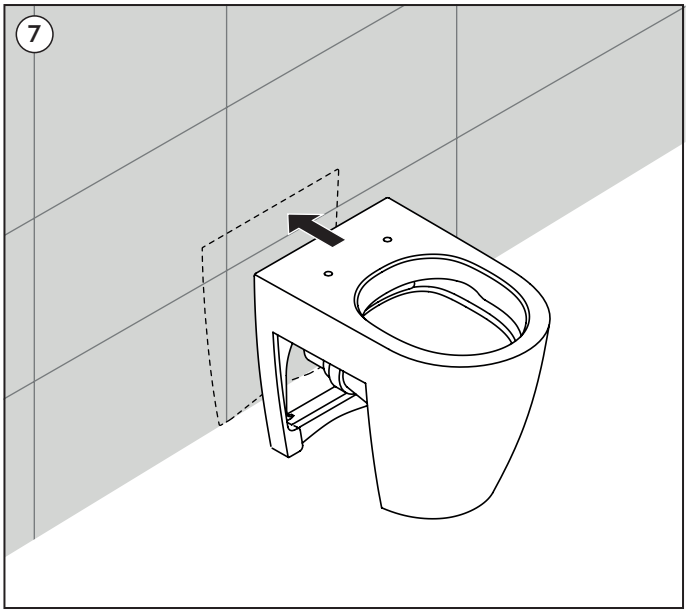

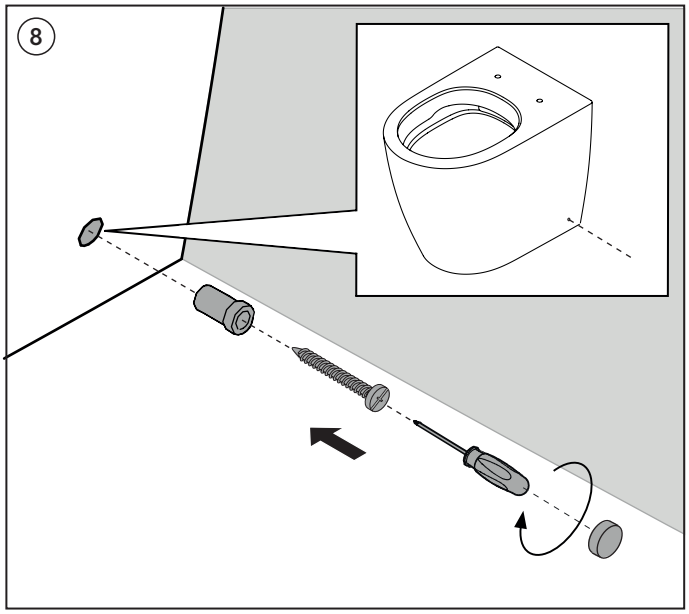

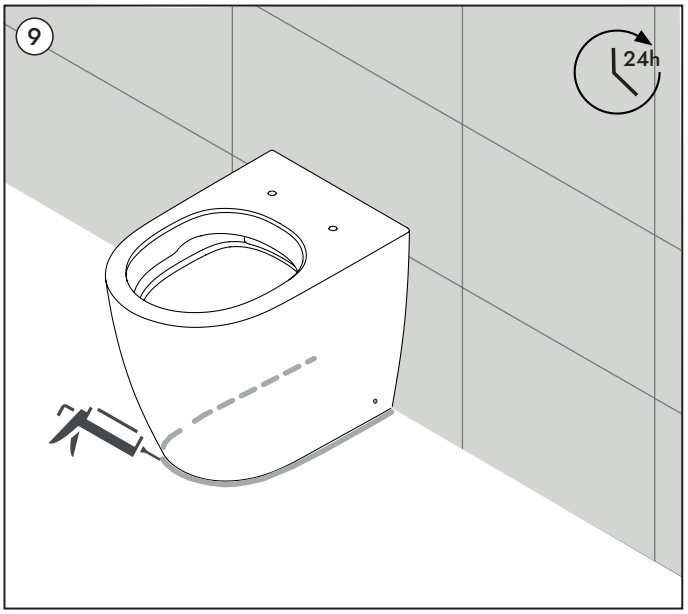

NEXTREND - GMBH | Weiherstraße 1, 65439 Flörsheim a. M., GERMANY
Fon: +49(0)6145–598830 | Fax: +49(0)6145–5988339
support@bernstein-badshop.de | www.bernstein-badshop.de

We reserve the right to make technical improvments and design modifications to the products illustrated.